Metal Beams

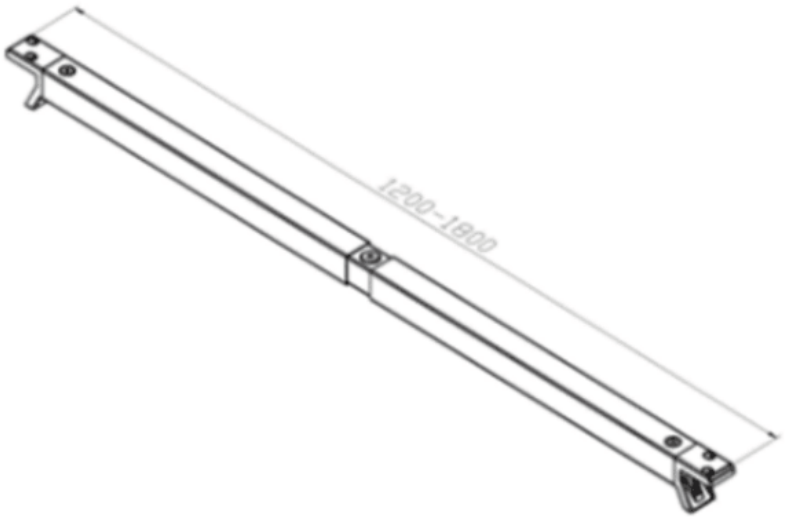

Product Description

Technical Specification:

- Heavy Duty Powder Coated Adjustable Steel beams
- Material: Cold rolled Steel
- Material Thickness: 1.5 mm
- Powder Coated: White Color
- Sizes: Side - Side Adjustable beam 120-180 cm, Side - Side Adjustable beam 140 200 cm, Side - Middle Adjustable beam 120 180 cm, Middle - Middle Adjustable beam 120 180 cm, Side - Return beam